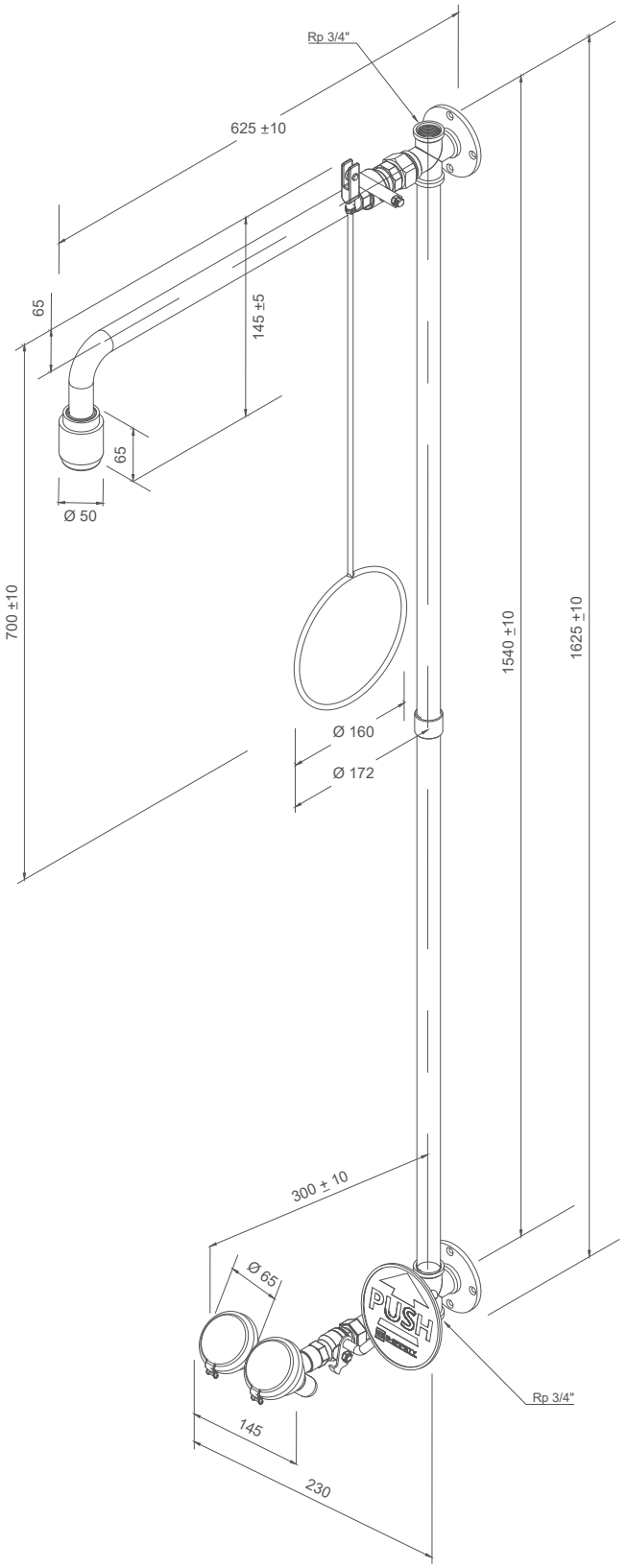


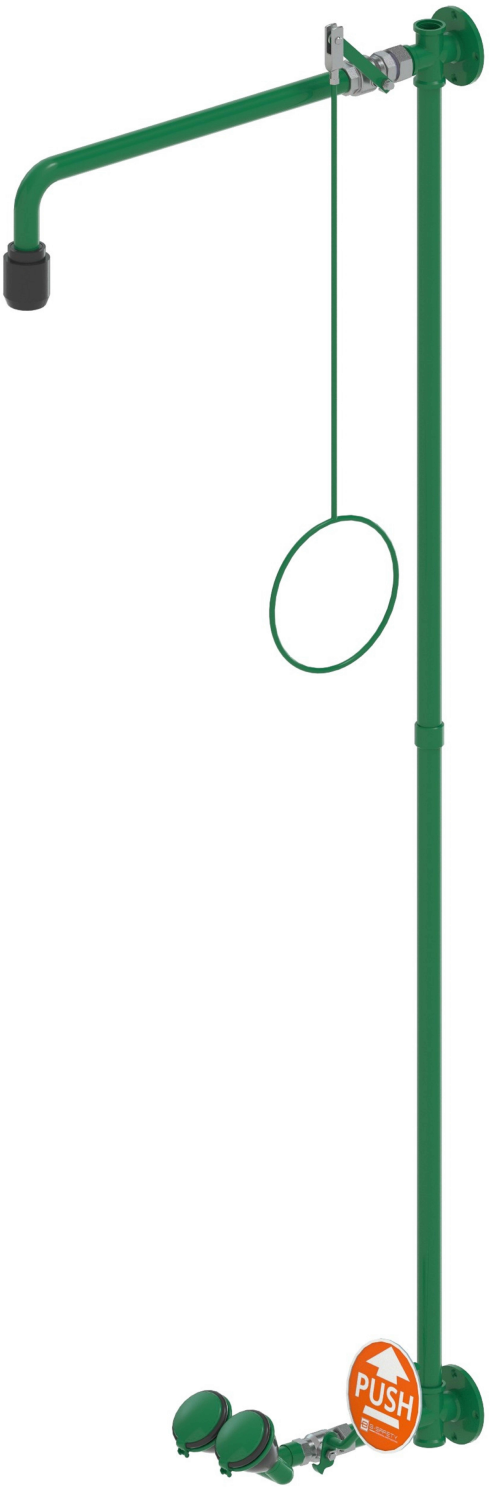


| B-SAFETY PROFESSIONAL SAFETY SOLUTIONS | Article: BR861085 | REV / DATE: 30.01.2024 |
|---|---|---|
| ClassicLine Notduschkombination, mit Sicherheits-Augendusche BR210085. Für Wandmontage Aufputz. Wasseranschluss 3/4-Zoll-IG. | ClassicLine body safety shower combination, with eye shower BR210085. Wall mounted, exposed pipework Water inlet 3/4" female. | |